HELICAL GEARED MOTORS

UNIT RATINGS:
1400 1/min input speed

i_n	n_2	η	Motor	63	80	90	100	112	132
1 : 3,5	400	0,919	P_1 T_2	0,088 2,0	0,368 8,3	0,735 16,2	1,470 33,4	2,940 66,0	5,513 118,9
1 : 4	350	0,919	P_1 T_2	0,088 2,3	0,368 10,0	0,735 18,9	1,470 39,4	2,940 73,4	5,513 132,3
1 : 5	280	0,918	P_1 T_2	0,088 2,8	0,368 11,8	0,735 22,5	1,470 47,1	2,205 65,2	5,513 188,0
1 : 6	233	0,917	P_1 T_2	0,088 3,2	0,368 14,2	0,735 27,2	1,103 42,6	2,205 89,4	4,043 157,0
1 : 7	200	0,916	P_1 T_2	0,088 4,0	0,368 16,2	0,551 23,3	1,103 48,9	2,205 103,0	4,043 180,6
1 : 8	175	0,915	P_1 T_2	0,088 4,8	0,257 12,3	0,551 27,0	1,103 56,8	1,470 76,2	4,043 200,7
1 : 9	155	0,914	P_1 T_2	0,088 5,1	0,257 14,3	0,551 31,4	0,735 44,8	1,470 90,3	2,940 173,0
1 : 11	127	0,913	P_1 T_2	0,088 5,9	0,257 16,9	0,551 36,6	0,735 51,5	1,103 81,0	2,940 207,4
1 : 13	107	0,912	P_1 T_2	0,088 7,5	0,257 19,3	0,368 27,9	0,735 58,8	1,103 92,4	2,940 237,6
1 : 15	93	0,911	P_1 T_2	0,088 8,9	0,184 16,8	0,368 32,3	0,551 51,3	1,103 107,0	2,205 204,4
1 : 17	82	0,910	P_1 T_2	0,088 9,8	0,184 19,6	0,368 37,6	0,551 60,4	1,103 125,0	2,205 238,4
1 : 19	73	0,872	P_1 T_2	0,088 10,5	0,184 21,2	0,257 28,0	0,551 61,5	0,735 89,4	2,205 264,2
1 : 23	60	0,871	P_1 T_2	0,088 12,8	0,184 25,3	0,257 33,1	0,551 72,6	0,735 106,0	1,470 208,5
1 : 27	51	0,870	P_1 T_2	0,088 14,8	0,132 21,6	0,257 39,4	0,368 57,8	0,735 127,0	1,470 250,3
1 : 32	43	0,869	P_1 T_2	0,088 17,0	0,132 25,9	0,257 47,5	0,368 69,9	0,551 109,0	1,470 285,2
1 : 37	37	0,868	P_1 T_2	0,088 17,0	0,132 29,5	0,184 41,2	0,368 80,3	0,551 125,0	1,103 245,9
1 : 41	34	0,868	P_1 T_2	0,088 17,0	0,132 32,9	0,184 44,9	0,368 87,3	0,551 139,0	1,103 274,0
1 : 49	28	0,867	P_1 T_2	0,088 17,0	0,132 39,0	0,184 53,4	0,257 68,7	0,368 109,8	0,735 216,4
1 : 58	24	0,866	P_1 T_2	0,088 17,0	0,088 31,2	0,184 64,6	0,257 83,2	0,368 132,0	0,735 258,8
1 : 67	21	0,865	P_1 T_2	0,088 17,0	0,088 35,5	0,132 53,1	0,257 95,5	0,368 150,0	0,735 295,8
1 : 77	18	0,864	P_1 T_2	0,088 17,0	0,088 40,9	0,132 61,8	0,257 111,0	0,368 173,0	0,551 254,6
1 : 90	15,5	0,863	P_1 T_2	0,088 17,0	0,088 47,7	0,132 71,7	0,257 131,0	0,368 200,0	0,551 297,0

i_n = nominal ratio
n_2 = output speeds (1/min)
η = overall theoretical efficiency
P_1 = recommended motor rating (kW)
T_2 = output torque when fitted with motor of recommended rating (Nm)

The values overprinted in gold are the maximum ratings of the reducer.
DO NOT EXCEED UNDER ANY CIRCUMSTANCES.

ACTUAL RATIOS:

i_n	Z	63	80	90	100	112	132
1 : 3,5	2	3,548	3,569	3,409	3,549	3,505	3,395
1 : 4	2	4,031	4,270	4,030	4,196	3,904	3,782
1 : 5	2	4,929	5,061	4,806	5,012	4,627	5,383
1 : 6	2	5,684	6,078	5,084	6,073	6,340	6,142
1 : 7	2	7,172	6,935	6,640	6,977	7,307	7,075
1 : 8	2	8,518	7,993	7,682	8,107	8,088	7,881
1 : 9	2	9,200	9,333	8,996	9,559	9,587	9,341
1 : 11	2	10,61	11,004	10,424	11,00	11,514	11,219
1 : 13	2	13,39	12,555	11,933	12,63	13,136	12,800
1 : 15	2	15,90	14,470	13,797	14,68	15,141	14,752
1 : 17	2	17,47	16,896	16,157	17,31	17,680	17,226
1 : 19	3	19,48	19,033	19,038	18,39	19,846	19,856
1 : 23	3	23,82	22,774	22,504	21,75	23,522	23,534
1 : 27	3	27,47	26,993	26,835	25,97	28,256	28,264
1 : 32	3	32,01	32,418	32,405	31,47	32,231	32,247
1 : 37	3	36,37	36,986	37,095	36,15	37,148	37,148
1 : 41	3	41,17	41,230	40,418	39,37	41,118	41,377
1 : 49	3	51,28	48,868	48,198	47,02	48,736	49,043
1 : 58	3	59,70	58,690	58,202	56,98	58,530	58,900
1 : 67	3	64,70	66,960	66,626	65,45	66,779	67,200
1 : 77	3	76,80	77,176	77,032	76,05	76,968	77,452
1 : 90	3	84,30	90,117	90,213	89,67	89,873	90,440

i_n = nominal ratio
Z = n. of stages

Service Factor (Fs)

A worm gear recommended for a particular application must be rated for the output power needed, uprated according to the service factor **Fs**, where **Fs = Fu x Fd x Fa.**
Fu: is the stress factor that reflects the degree of input shock load.
Fd: is the wear factor that reflects the required life of the drive.
Fa: is the starting factor that reflects the frequency "stop/starts".
These factors are shown in the following tables.

Fu stress factor		Driven machine		
		without shocks	with normal shocks	with heavy shocks
Driving machine	electric motor with normal startingtorque	1	1,25	1,5
	electric motor with high startingtorque	1,25	1,5	1,8
	brake motor	1,5	1,8	2,25

working life (hours)	**Fd** wear factor
1.000	0,68
2.500	0,8
5.000	1
10.000	1,25
15.000	1,4
20.000	1,6

number of stop/starts	**Fa** starting factor
5 avv./h.	1
25 avv./h.	1,25
500 avv./h.	1,6
1000 avv./h.	2,7

Foot mounted (MCP)

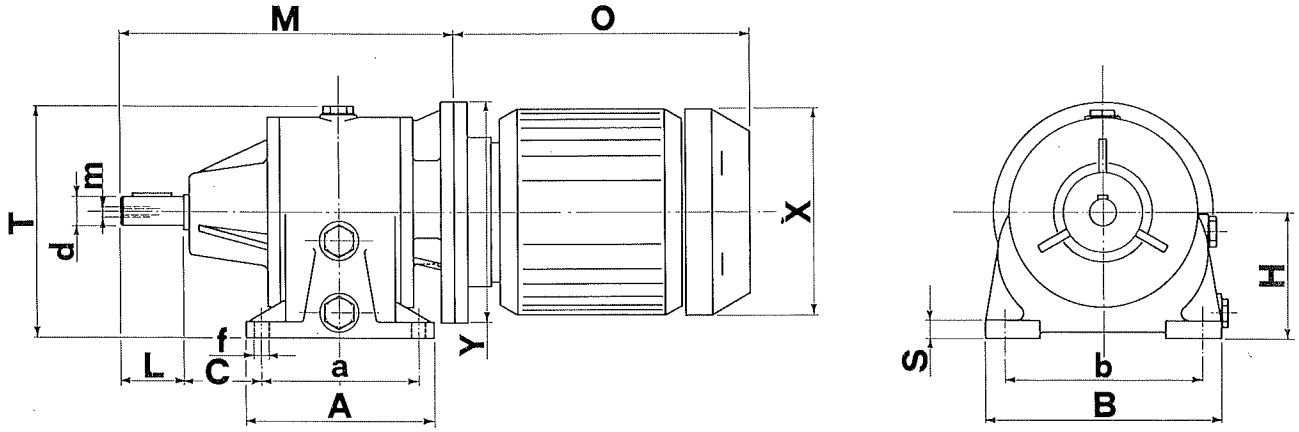

Flange mounted (MCF)

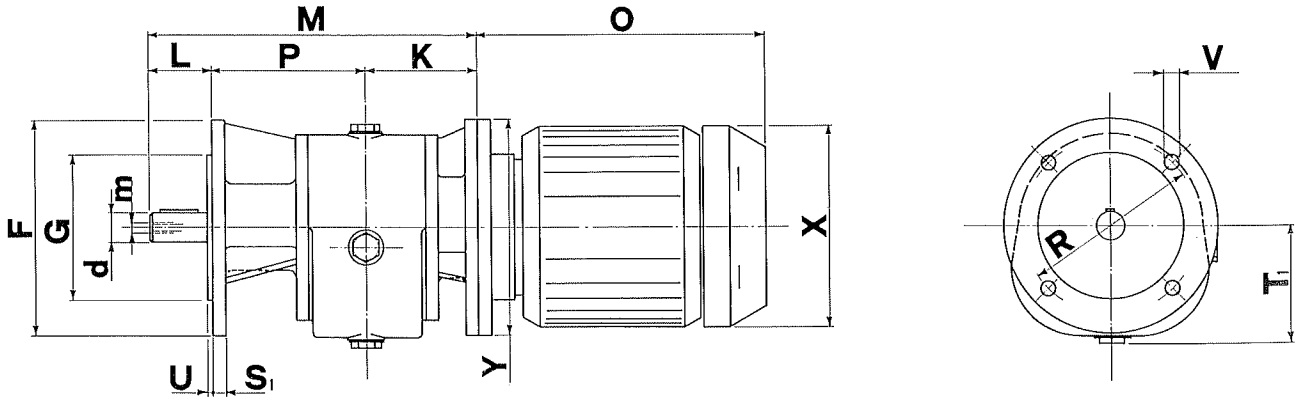

TYPE	63	80			90			100			112			132		
IEC	56	56	63	71	63	71	80	71	80	90	71	80	90	80	100	132
											100			90	112	
M	128	212			238			304			346,5			409,5	419,5	451,5
K	30	72			89,5			111			136,5			149,5	159,5	191,5
A	90	120			130			172			180			200		
a	71	100			100			140			140			160		
B	112	150			174			192			220			250		
b	90	125			140			160			190			210		
C	25	50			48,5			63			70			89		
d h6	11	19			24			28			32			38		
F	120	140			160			200			250			300		
f	6,5	9			9			12			12			15		
G h8	80	95			110			130			180			230		
H h11	63	80			90			100			112			132		
L	22	40			50			60			70			90		
m	M5	M8			M8			M8			M10			M10		
P	76	100			98,5			133			140			170		
R	100	115			130			165			215			265		
S	8	10			12			14			16			20		
S1	7	9			10			12			14			15		
T	108	148			171			190			215			254		
T1	63	80			96			107			116			136		
U	2,5	3			3,5			3,5			4			5		
V	6,5	9,5			9,5			11,5			15			15		
Gear Only kg.	1,25	7,5			11,8			23			27,5			41,25	43	47

THREE - PHASE, 4 POLE MOTORS WITH B5 FLANGES

Powers		Dimensions				Weight of geared motor (kg.)					
kW	HP	IEC	O	X	Y	63	80	90	100	112	132
0,037	0,05	–	135	100	80						
0,088	0,12	56	174	110	120	4,75	11,0				
0,132	0,18	63	188	130	140		11,6	15,9			
0,184	0,25	63	188	130	140		12,1	16,4			
0,257	0,35	71	221	143	160		13,2	17,5	28,7		
0,368	0,50	71	221	143	160		13,8	18,1	29,3	33,8	
0,551	0,75	80	239	160	200			20,8	32,0	36,5	50,25
0,735	1,00	80	239	160	200			22,0	33,2	37,7	51,45
1,103	1,50	90	255	180	200				35,1	39,6	53,35
1,470	2,00	90	280	180	200				38,3	42,8	56,55
2,205	3,00	100	305	203	250					48,5	64,00
2,940	4,00	100	305	203	250					50,5	66,00
4,043	5,50	112	322	225	250						79,00
5,513	7,50	132	348	264	300						92,00
7,350	10,00	132	385	266	300						
11,025	15,00	160	500	320	350						
14,700	20,00	160	544	320	350						

Foot mounted (CP)

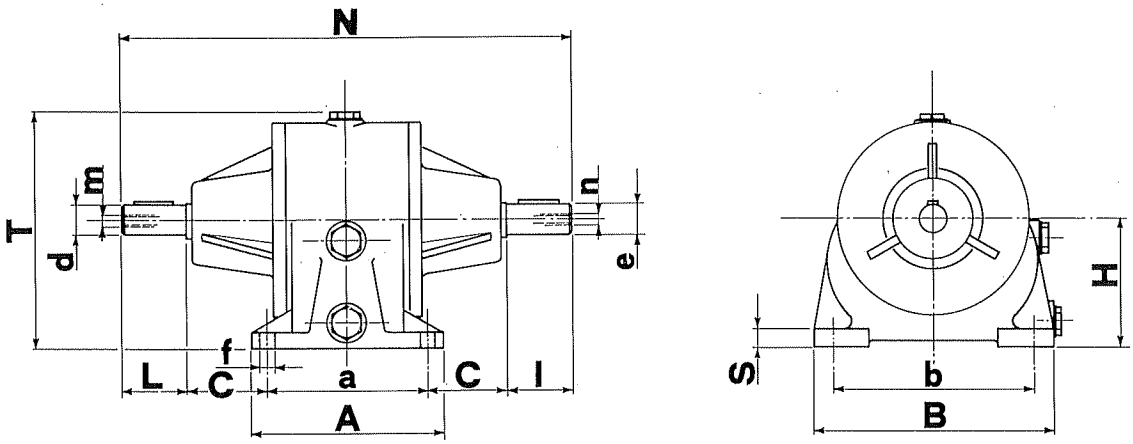

Flange mounted (CF)

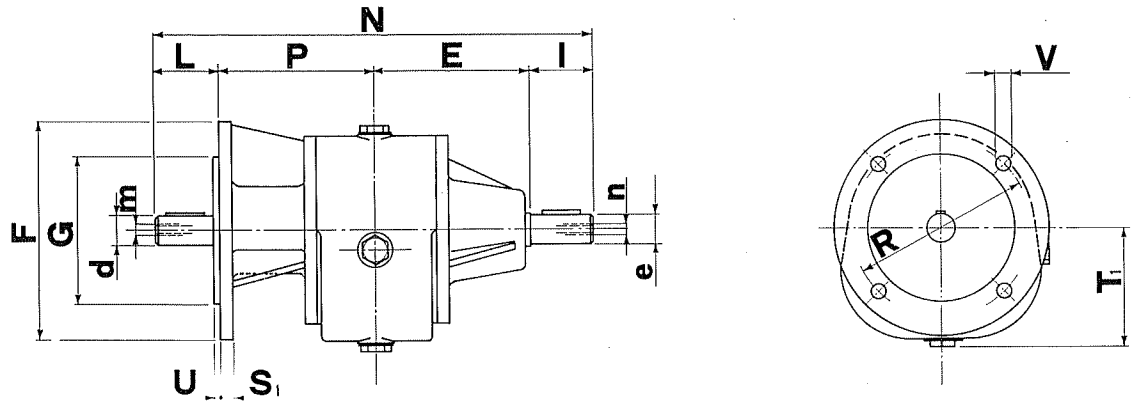

TYPE	80	90	100	112	132
A	120	130	172	180	200
a	100	100	140	140	160
B	150	174	192	220	250
b	125	140	160	190	210
C	50	48,5	63	70	89
d h6	19	24	28	32	38
E	100	98,5	133	140	169
e j6	14	19	24	28	32
F	140	160	200	250	300
f	9	9	12	12	15
G h8	95	110	130	180	230
H h11	80	90	100	112	132
I	30	40	50	60	70
L	40	50	60	70	90
m	M8	M8	M8	M10	M10
N	270	287	376	410	499
n	M6	M8	M8	M8	M10
P	100	98,5	133	140	170
R	115	130	165	215	265
S	10	12	14	16	20
S1	9	10	12	14	15
T	148	171	190	215	254
T1	80	96	107	116	136
U	3	3,5	3,5	4	5
V	9,5	9,5	11,5	15	15
Weight (kg)	6,4	10,9	21,5	26	–

Designation

1	2	3	4	5
C	P	63		PAM
		.....	1 :	
MC	F	132		P_1.

1 : in line reducer (C)
helical geared motor (MC)

2 : foot mounted (P)
flange mounted (F)

3 : size

4 : nominal ratio

5 : flange or motor's characteristics

Designation examples

- CP 90 1 : 15 (foot mounted reducer)
- MCP 90 1 : 15 p.a.m. 160/14 (foot mounted reducer with flange to accept motor size IEC 71-B5)
- MCP 90 1 : 15 kW 0,368 (foot mounted geared motor)
- In this case it is necessary to specify the type of motor.

Lubrication

- Size 63 is packed for life.
- We deliver the others without oil.
It is necessary, therefore, to fill the reducer to the recommended level before use.

Average oil capacity (Lt)

63	80	90	100	112	132
0,120	0,350	0,500	1,000	1,500	3,000

Oils recommended for normal applications: BP ENERGOL GR 220 XP
SHELL OMALA OIL 220
IP MELLANA OIL 220

Running in

We recommend about 400 hours of running, when the oil should be changed after flushing out. Check the oil level periodically and change it every 1500 hours running.

Table of keyway sizes
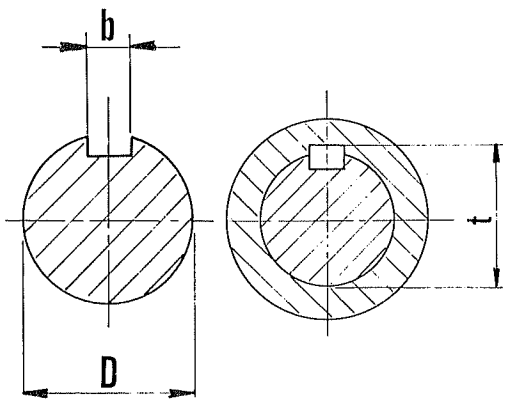
D	10 ÷ 12	12 ÷ 17	17 ÷ 22	22 ÷ 30	30 ÷ 38	38 ÷ 44	44 ÷ 50	50 ÷ 58	58 ÷ 65
b	4	5	6	8	10	12	14	16	18
t	D + 1,8	D + 2,3	D + 2,8	D + 3,3	D + 3,3	D + 3,3	D + 3,8	D + 4,3	D + 4,4